Product manual

PSE EX Switch

CONTENTS

Contents **1**

1 PRODUCT DESCRIPTION **2**

1.1 Functional Description: NO Switch 2

1.2 Annotation to the Protection Type 3

2 TECHNICAL DATA AND DIMENSIONAL DRAWINGS **4**

2.1 Technical Data 4

2.2 Component dimensions 6

2.3 Hole Dimensions 8

2.4 Accessories 8

3 Order numbers **9**

3.1 M16 Series 9

3.2 Lettering 10

4 PACKAGING **13**

5 QUALIFICATION TESTS **14**

5.1 IP Protection Class 14

5.2 IK Protection Class 14

5.3 Salt-Spray Test 14

6 APPROVALS **15**

7 ATEX Approval **15**

8 COMPLIANCE **15**

1 PRODUCT DESCRIPTION

- piezo switch certified according to ATEX category II 2 G EEx ib IIB T4
- can be used in plants aboveground
- can be used in environments with air-gas mixtures and fumes
- particularly suitable for use in harsh environments
- high reliability, long lifetime with 20 mill. actuations
- no maintenance costs, since no mechanical wear parts

1.1 Functional Description: NO Switch

The piezo switch is based on the functional principle of the piezoelectric crystal. The action of force on the piezo disk causes a voltage to be induced due to a charge transfer. The voltage generated is converted by the electronic connection into a polarity-neutral, electronic switch contact.

During the voltage drop, the electronic switch contact is closed for the specified pulse duration. After this, the electronic switch contact opens again, even if the force is still present. The period that the electronic switch contact remains closed depends on the actuating speed and force as well as on the duration of actuation.

Diagram of an NO switch:

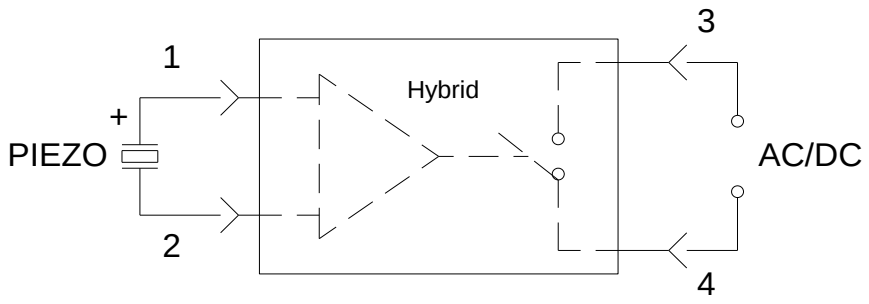

The piezo disk is connected to the terminals 1 and 2. The electric circuit to be switched is connected at the terminals 3 and 4. This can be either direct voltage (DC) or alternating voltage (AC). If a pulse is applied to the piezo disk, terminal 1 becomes positive in relation to terminal 2 due to the voltage generated. The integrated switching element controls the electric circuit to be switched.
In the neutral position of the piezo switching element, the terminals 3 and 4 are non-conductive, and initial contact resistance is greater than 10 MOhm. When the piezo disk is actuated, the initial contact resistance is reduced to less than 20 Ohm.
When actuating the piezo disk, the resistance between terminals 3 and 4 is therefore changed from high resistance → low resistance → high resistance.

This corresponds in principle to the function of a conventional NO pushbutton switch.

1.2 Annotation to the Protection Type

The explosion protected piezo switch element (PSE) has the function of a NO (normally open) switch.
The permissible voltage and current of the explosion protected PSE switch are limited, so that the PSE EX is intrinsically safe in accordance with EN60079-11.
For the electrical characteristics please refer to the table under point 2 “Technical data”.

The use of the PSE is therefore permitted only in areas where the formation of explosive atmospheres caused by gases, fumes, mist or dust mixing with air occurs occasionally.

The PSE has a high degree of security that is also effective at common equipment malfunctions or errors.

The explosion protected PSE is classified according to EN 60079-0 in the device group II, category 2.

Attention:

- The permissible operating temperature is -20°C to +60°C.
- The approval will cease when the type label is removed.
- The switch had to be installed and used according to IEC/EN 60079-14 and IEC/EN 60079-25.

2 TECHNICAL DATA AND DIMENSIONAL DRAWINGS

2.1 Technical Data

Electrical Data			
Switching Voltage max.	U_I	(VAC/DC)	24/24
Switching Current max.	I_I	(mA)	40
Rated Breaking Capacity	P_I	(W)	0.96
Lifetime (at Rated Breaking Capacity)		(Mio.)	20
Switch resistance off (OFF=not actuated)		(MΩ)	>10
Switch resistance on (Ta=25°C) (ON=actuated)		(Ω)	<20
Capacity	C_I	(nF)	5
Inductivity	L_I (non-applicable)	(H)	-
NO Pulse Time (depending on the actuating force, time and speed)		(ms)	20-1000
Contact Configuration			polarity-free
Switch Function			NO switch

Mechanical Data		
Actuating Force (at ambient temperature)	(N)	≤ 3[1)]
Actuating Travel	(mm)	0.002
Torque	(Nm)	2.5
IK Protection Class	(IK)	02

Climatic Data		
Operating Temperature	(°C)	-20 to +60
Storage Temperature	(°C)	-20 to +60
IP Degree of Protection Front Side submerged IP Degree of Protection Front Side hose water	(IP)	67 69K

[1)] *At temperatures lower than -10°C, the actuating force increases 2- to 4-fold.*

Material Individual Parts	**Material**
Housing (depending on type)	Stainless Steel [2)]
	Anodized aluminum
	Polyamide
	Messing chrome-plated

[2)] *When using the switch in a saline or chloric environment, special materials must be used. Items available upon request.*

2.2 Component dimensions

2.2.1 M16 Series with Finger Guidance

with Pins

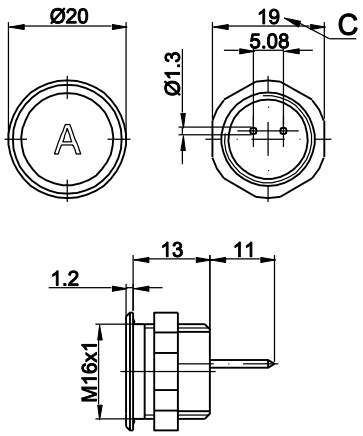

with Crimp Terminal male

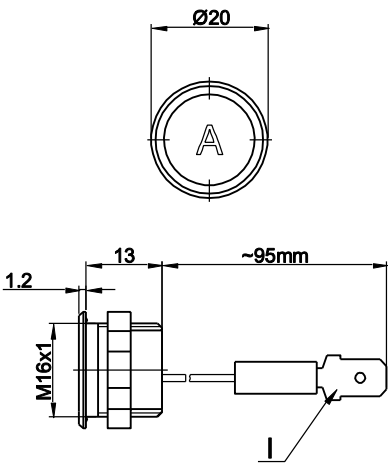

with AMP

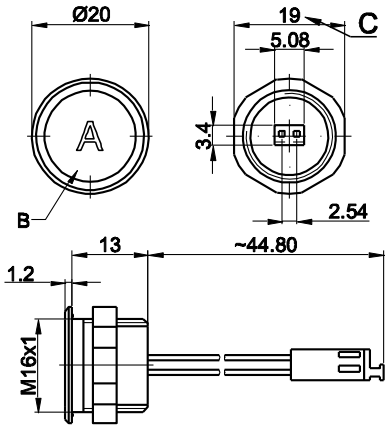

Legend:

- *B = Actuating Area*
- *C = Width Across Flats*
- *I = Crimp Terminal male 6.3x0.8*

Lettering:

- *either with/without lettering (see Capter3.2)*
- *position of the connections with respect to the position of the lettering is not defined*

2.2.1.1 Design Possibilities for Housing Geometry: M16 (on request)

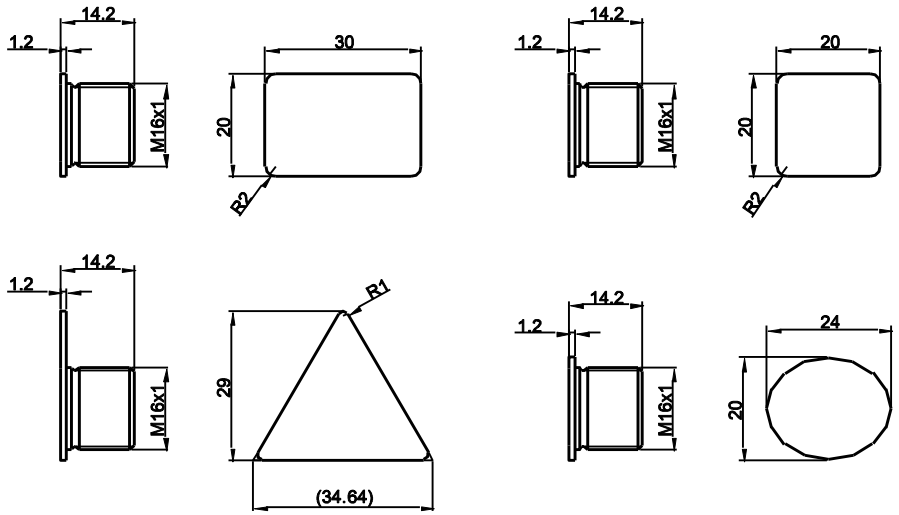

2.2.1.2 Design Possibilities for Actuation Area

with finger guidance (standard)

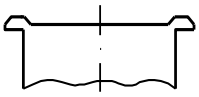

without finger guidance (on request)

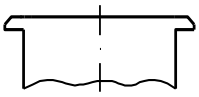

elevated front design: (standard, others on request)

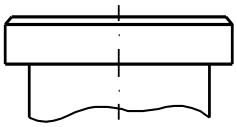

2.2.1.3 Connection variants

- Wire (Standard: 0,14mm² / 200mm wire-length)
- Pins (with Connection Terminal 0701.9225)
- Crimp Terminal male 6,3x0,8
- AMP

2.3 Hole Dimensions

M16

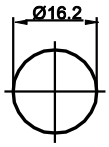

2.4 Accessories

Connection Terminal for Pin solution

Order number: 0701.9225

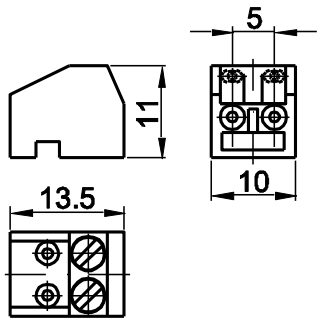

3 ORDER NUMBERS

3.1 M16 Series

Item Number	Function	Connection	Housing Material	Housing Color
1241.2415.1.XXX	EX - NO	Pins	Aluminum	gold
1241.2415.3.XXX	EX - NO	Pins	Aluminum	red
1241.2415.4.XXX	EX - NO	Pins	Aluminum	blue
1241.2415.5.XXX	EX - NO	Pins	Aluminum	green
1241.2415.7.XXX	EX - NO	Pins	Aluminum	black
1241.2415.8.XXX	EX - NO	Pins	Aluminum	Aluminum natural
1241.2435.8.XXX	EX - NO	Crimp Terminal male	Aluminum	Aluminum natural
1241.2485.8.XXX	EX - NO	AMP-Connector	Aluminum	Aluminum natural
1241.2515.XXX	EX - NO	Pins	Messing chromed	
1241.2615.XXX	EX - NO	Pins	Stainless Steel	

The listed item numbers represent a selection from the range of piezo switches.
Other mounting diameters, materials, colors and connections are available upon request.

3.2 Lettering

The last three figures of the order number relate to the type of lettering.

001-074	Standard Lettering
101-	Customized Lettering

Example for ordering with lettering - Aluminium / Plastic Material

1241.2XX5.X.XXX

- Basic version
- Symbols **001-074**
- Houseing color (Alu/Plastics)

Example for ordering with lettering - Stainless Steel

1241.2XX5.XXX

- Basic version
- Symbols **001-074**

Order Indices for Lettering

001= **A**	016=P	031= **4**	046= ↕	061= **EIN**
002= **B**	017= **Q**	032= **5**	047= →	062= **AUS**
003= **C**	018= **R**	033= **6**	048= ←	063= **AUF**
004= **D**	019= **S**	034= **7**	049= ↓	064= **AB**
005= **E**	020= **T**	035= **8**	050= ↑	065= **ON**
006= **F**	021= **U**	036= **9**	051= **%**	066= **OFF**
007= **G**	022= **V**	037= +	052= √	067= **UP**
008= **H**	023= **W**	038= –	053= **CTRL**	068= **DOWN**
009= **I**	024= **X**	039= **.**	054= **RETURN**	069= **HIGH**
010= **J**	025= **Y**	040= ×	055= **SHIFT**	070= **LOW**
011= **K**	026= **Z**	041= ÷	056= **LOCK**	071= **ON/OFF**
012= **L**	027= **0**	042= *	057= **STOP**	072= **START**
013= **M**	028= **1**	043= =	058= **ENTER**	073= **RESET**
014= **N**	029= **2**	044= #	059= **BACK**	074= ⏻
015= **O**	030= **3**	045= ↔	060= **LINE**	

Font size

PSE M16

Individual characters:	Height: 5 mm; font: Helvetica normal DIN1451-1E
Lettering, max. 3 characters:	Height: 3 mm; font: Helvetica normal DIN1451-1E
Symbols (Indices 037-052):	Height of capital letters: 5 mm; font: True Type, Symbol

Standard Colors for Lettering

Stainless Steel:	Black	Filled letters	
Aluminum natural:	Gray	Filled letters	(only after customer approval)
Anodized Aluminum:	White	Filled letters	

4 PACKAGING

PSE Switches

M16	air cushion bags 1 piece	10 pieces per carton

Switch is individually packed in ESD bag with operating manual.

Nuts with sealing rings (10 pieces) are packaged separately and are enclosed in the carton.

5 QUALIFICATION TESTS

5.1 IP Protection Class

IP Protection Class IEC/DIN/EN/ 60529	Front Side	IP 67
IP Protection Class DIN 40050-9:1993 (High-pressure steam-cleaning test)	Front Side	IP 69K
DIN EN 60068-2-30 Db	Front side / back side	

5.2 IK Protection Class

Tested centrically

IK Protection Class DIN EN 50102	IK 02

5.3 Salt-Spray Test

Salt-spray test according to DIN 50021- SS

24h, 48h and 96h test duration

After 8h, the start of corrosion may be discerned; after 96h, this corrosion has spread across large areas of the switch.

This surface corrosion may be removed under running water.

6 APPROVALS

Description	Standard
Thermal Shock	MIL-STD 202F Method 107G
High Temperature	MIL-STD 810E Method 501.3
Low Temperature	MIL-STD 810E Method 502.3
Humidity	MIL-STD 810E Method 507.3
Vibration	MIL-STD 202F Method 204D
Mechanical Shock	MIL-STD 202F Method 213B
RFI	MIL-STD 416D Method RS103
ESD	EN 61000-4-2
Burst	EN 61000-4-4

7 ATEX APPROVAL

Description	Denotation
Model test report	TÜV 08 ATEX 554671X
Marking	II 2 G Ex ib IIB T4

8 COMPLIANCE

All articles are ROHS-compliant and in compliance to the EMV- Directive (2004/108/EWG).