Circuit Breaker for Equipment thermal, THT terminals for PCB mounting horizontal, 1 pole

See below:
Approvals and Compliances

Description
- Thermal circuit breaker
- 1-pole
- On request available with elevaled glow-wire ratings
- THT connectors

Unique Selling Proposition
- Reset type
- Cycling trip-free release
- Compact design
- Different mounting possibilities

Applications
- Power supplies
- Uninterruptible power supply
- Power tools
- Industrial appliances
- HVAC
- Household appliances

References

Weblinks
pdf data sheet, html datasheet, General Product Information, Distributor-Stock-Check, Detailed request for product, Product News, Video

Technical Data

Rated Voltage AC	240 VAC
Rated Voltage DC	48/32 VDC
Rated current	3-15 A, see approbations
Conditional short circuit capacity Inc	IEC 60934: PC1, AC 240 V: 2 kA
	UL / CSA: SC, AC 240 V DC 48 / 32 V: 2 kA, C1
Degree of protection front side	IP40
Endurance minimum	IEC: 200% Ir, cos φ 0.6: min. 50 switching cycles
Endurance typical	3-8 A: 150% Ir, cos φ 0.9: 2500 switching cycles
	10-15 A: 150% Ir, cos φ 0.9: 6000 switching cycles
Dielectric Strength	1500 VAC
Insulation Resistance	500 VDC > 1000 MΩ

Allowable Operation Temp.	3 A: -5 °C to 60 °C
	4 A: -5°C to 50 °C
	5-15 A: -5 °C to 60 °C
Soldering Methods	Wave
Solderability	245 °C / 3 sec acc. to IEC 60068-2-20 / Test Ta, method 1
Resistance to Soldering Heat	260 °C / 10 sec acc. to IEC 60068-2-20 / Test Tb, method 1A
Weight	approx. 12.5 g

Approvals and Compliances

Detailed information on product approvals, code requirements, usage instructions and detailed test conditions can be looked up in Details about Approvals

SCHURTER products are designed for use in industrial environments. They have approvals from independent testing bodies according to national and international standards. Products with specific characteristics and requirements such as required in the automotive sector according to IATF 16949, medical technology according to ISO 13485 or in the aerospace industry can be offered exclusively with customer-specific, individual agreements by SCHURTER.

Approvals

The approval mark is used by the testing authorities to certify compliance with the safety requirements placed on electronic products.

Approval Reference Type: T9

Approval Logo	Certificates	Certification Body	Description
	VDE Approvals	VDE	VDE Certificate Number: 40038016
	UL Approvals	UL	UR File Number: E71572
	CCC Approvals	CCC	CCC Certificate Number: 2020970307003348

Product standards

Product standards that are referenced

Organization	Design	Standard	Description
	Designed according to	IEC 60934	Circuit-breakers for equipment (CBE)
	Designed according to	UL 1077	Standard for Supplementary Protectors for Use in Electrical Equipment
	Designed according to	CSA C22.2 No. 235	Supplementary Protectors
	Designed according to	GB 17701	Circuit-breaker for equipment

Application standards

Application standards where the product can be used

Organization	Design	Standard	Description
	Suitable for applications acc.	IEC/UL 62368-1	Audio/video, information and communication technology equipment - Part 1: Safety requirements

Compliances

The product complies with following Guide Lines

Identification	Details	Initiator	Description
	CE declaration of conformity	SCHURTER AG	The CE marking declares that the product complies with the applicable requirements laid down in the harmonisation of Community legislation on its affixing in accordance with EU Regulation 765/2008.
	UKCA declaration of conformity	SCHURTER AG	The UKCA marking declares that the product complies with the applicable requirements laid down in the British Amendment of Regulation (EC) 765/2008.
	RoHS	SCHURTER AG	Directive RoHS 2011/65/EU, Amendment (EU) 2015/863
	China RoHS	SCHURTER AG	The law SJ / T 11363-2006 (China RoHS) has been in force since 1 March 2007. It is similar to the EU directive RoHS.
	REACH	SCHURTER AG	On 1 June 2007, Regulation (EC) No 1907/2006 on the Registration, Evaluation, Authorization and Restriction of Chemicals 1 (abbreviated as "REACH") entered into force.

Dimension [mm]

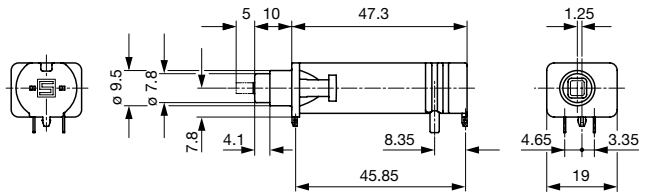

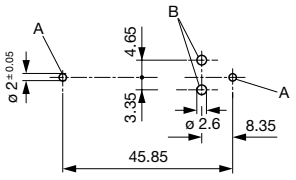

A Mechanical standoff
B Electrical terminal

Drilling diagram

Assembly Instructions

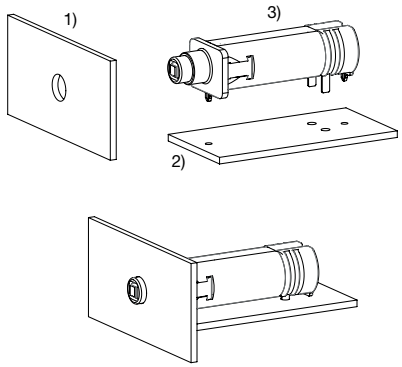

1) Front panel
2) PCB
3) T9-818

Approval		Rated current	Rated Voltage AC	Rated Voltage DC
	UL 1077	3 - 12 A 14 - 15 A	240 V 240 V	48 V 32 V
	CSA 22.2 235	3 - 12 A 14 - 15 A	240 V 240 V	48 V 32 V
	IEC 60934	3 - 12 A 14 - 15 A	240 V 240 V	48 V 32 V
	GB 17701	3 - 12 A 14 - 15 A	240 V 240 V	48 V 32 V

Typical internal resistance per pole

Rated Current [A]	Internal Resistance [mΩ]
3	80.0
4	26.3
5	24.1
6	19.0
7	18.0
8	14.8
10	13.0
12	12.7
14	9.7
15	8.0

Time-Current-Curves

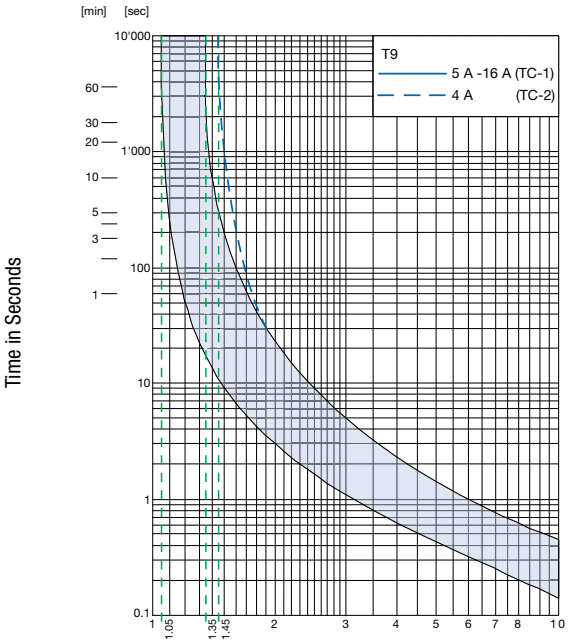

Ambient temperature +23°

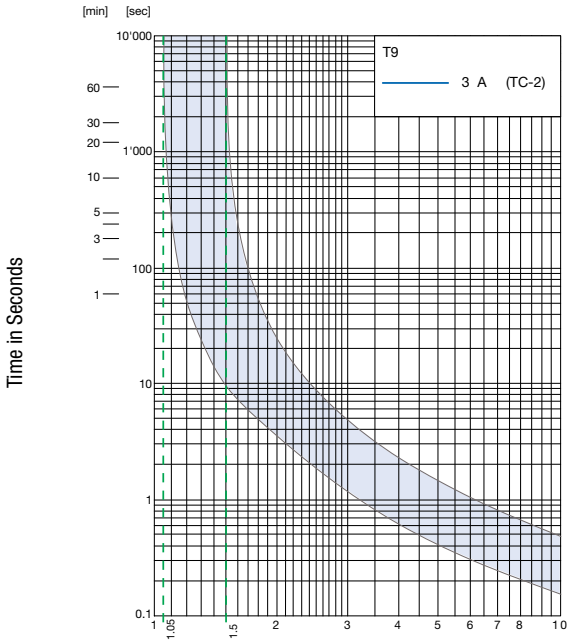

Ambient temperature +23°

Effect of ambient temperature

The units are calibrated for an ambient temperature of +23°C. To determine the rated current for a lower or higher ambient temperature, use a correction factor (typical value) from the table below:

Ambient Temperature [°C]	Correction factor
-5	0,85
+10	0,95
+23	1,00
+40	1,08
+60	1,21

Example: Rated current = 10 A, Environmental temperature = 60 °C, --> Correction factor = 1.21, Resulting current = 12.1 A --> Round to next higher rated current: 13 A

All Variants

Config. Code	Designation	Order Number
T9-818C-3-[nv]1	T9, Circuit Breakers, Drop-in type, Reset type, Solder THT horizontal, Rated current not printed on front, 3.0 A, Without cover	4404.0096
T9-818C-4-[nv]1	T9, Circuit Breakers, Drop-in type, Reset type, Solder THT horizontal, Rated current not printed on front, 4.0 A, Without cover	4404.0097
T9-818C-5-[nv]1	T9, Circuit Breakers, Drop-in type, Reset type, Solder THT horizontal, Rated current not printed on front, 5.0 A, Without cover	4404.0098
T9-818C-6-[nv]1	T9, Circuit Breakers, Drop-in type, Reset type, Solder THT horizontal, Rated current not printed on front, 6.0, Without cover	4404.0099
T9-818C-7-[nv]1	T9, Circuit Breakers, Drop-in type, Reset type, Solder THT horizontal, Rated current not printed on front, 7.0 A, Without cover	4404.0100
T9-818C-8-[nv]1	T9, Circuit Breakers, Drop-in type, Reset type, Solder THT horizontal, Rated current not printed on front, 8.0 A, Without cover	4404.0101
T9-818C-10-[nv]1	T9, Circuit Breakers, Drop-in type, Reset type, Solder THT horizontal, Rated current not printed on front, 10.0 A, Without cover	4404.0102
T9-818C-12-[nv]1	T9, Circuit Breakers, Drop-in type, Reset type, Solder THT horizontal, Rated current not printed on front, 12.0 A, Without cover	4404.0103
T9-818C-14-[nv]1	T9, Circuit Breakers, Drop-in type, Reset type, Solder THT horizontal, Rated current not printed on front, 14.0 A, Without cover	4404.0104
T9-818C-15-[nv]1	T9, Circuit Breakers, Drop-in type, Reset type, Solder THT horizontal, Rated current not printed on front, 15.0 A, Without cover	4404.0105

The listed variants should be available from stock. Other versions on request www.schurter.com/contact

Availability for all products can be searched real-time: https://www.schurter.com/en/info-center/support-tools/stock-check-distributors

Packaging Unit	100 Pcs

30.09.2024

The specifications, descriptions and illustrations indicated in this document are based on current information. All content is subject to modifications and amendments. Information furnished is believed to be accurate and reliable. However, users should independently evaluate the suitability and test each product selected for their own applications.